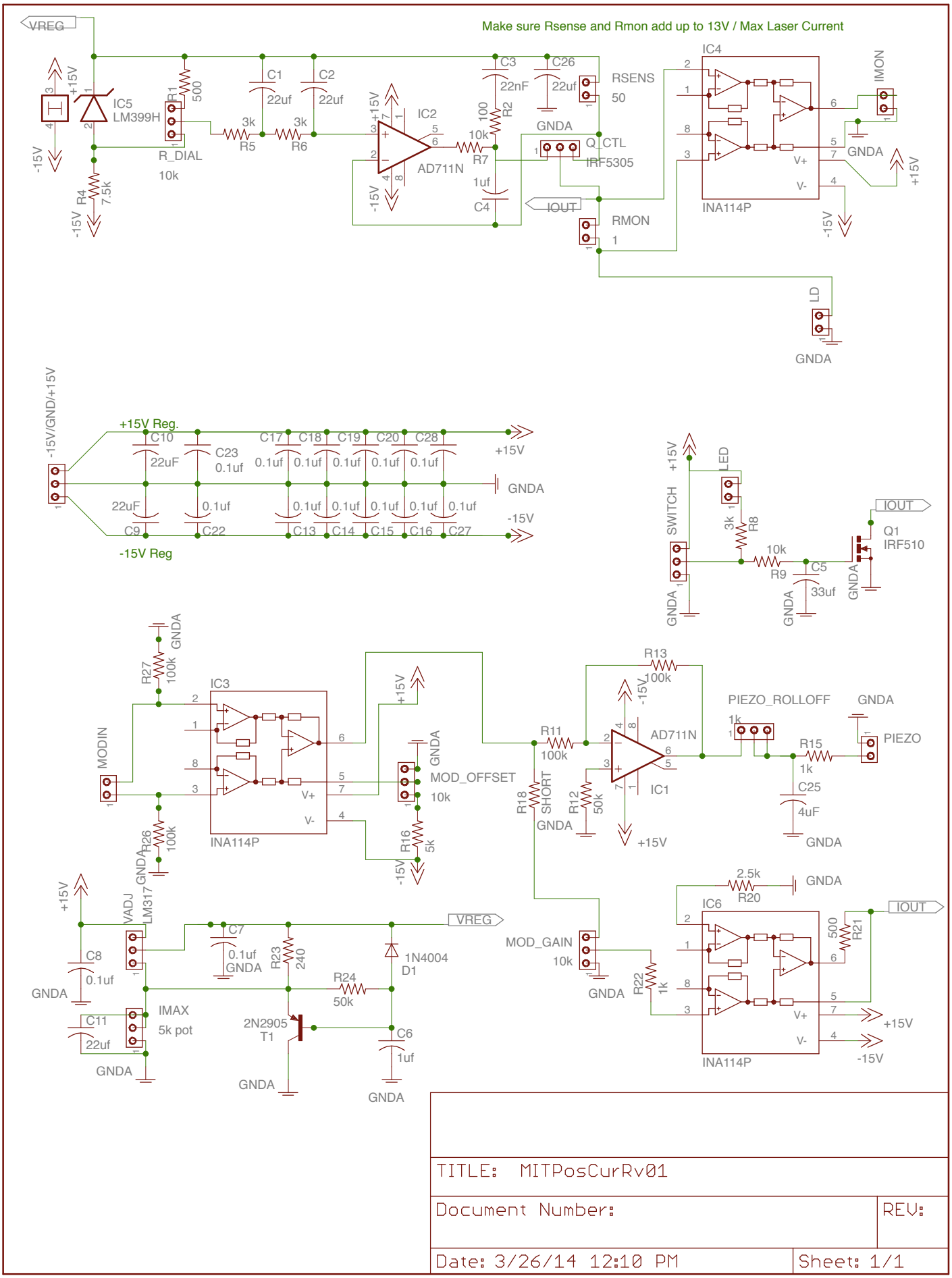
Make sure Rsense and Rmon add up to 13V / Max Laser Current
VREG
IC5
LM399H
R1
500
R_DIAL
10k
R4
7.5k
C1
22uf
C2
22uf
3k
R5
3k
R6
IC2
AD711N
C3
22nF
C26
22uf
100
R2
10k
R7
1uf
C4
RSENS
50
GNDA
Q_CTL
IRF5305
IOUT
RMON
1
IC4
INA114P
IMON
GNDA
LD
GNDA
-15V/GND/+15V
+15V Reg.
C10
22uF
C23
0.1uf
C17
C18
C19
C20
C28
0.1uf
+15V
GNDA
-15V
22uF
C9
0.1uf
C22
0.1uf
C13
C14
C15
C16
C27
-15V Reg
SWITCH
LED
3k
R8
10k
R9
C5
33uf
IOUT
Q1
IRF510
GNDA
R27
100k
IC3
INA114P
MODIN
R26
100k
MOD_OFFSET
10k
R16
5k
R13
100k
R11
100k
R18
SHORT
R12
50k
AD711N
IC1
PIEZO_ROLLOFF
1k
R15
1k
C25
4uF
PIEZO
VADJ
LM317
C8
0.1uf
C11
22uf
IMAX
5k pot
C7
0.1uf
R23
240
R24
50k
2N2905
T1
1N4004
D1
C6
1uf
VREG
MOD_GAIN
10k
R22
1k
2.5k
R20
IC6
INA114P
500
R21
IOUT
TITLE: MITPosCurRv01
Document Number:
REV:
Date: 3/26/14 12:10 PM
Sheet: 1/1